AILEEN

Friction Stir Welding Process

Iván García Arrizabalaga

CESOL

Funded by the European Union. Views and opinions expressed are however those of the author(s) only and do not necessarily reflect those of the European Union or the European Education and Culture Executive Agency (EACEA). Neither the European Union nor EACEA can be held responsible for them. PROJECT REFERENCE NO. 101103507

Co-funded by the European Union

Introduction

- Rotating tool plunged between two clamped plates.
- Causes a plasticized zone
- The rotating tool moves along the joint line

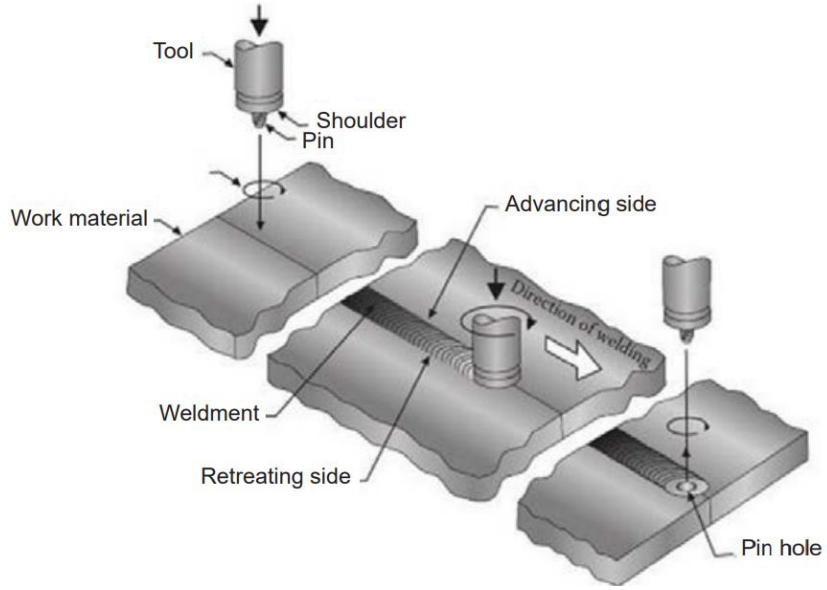

Process



Process



Process



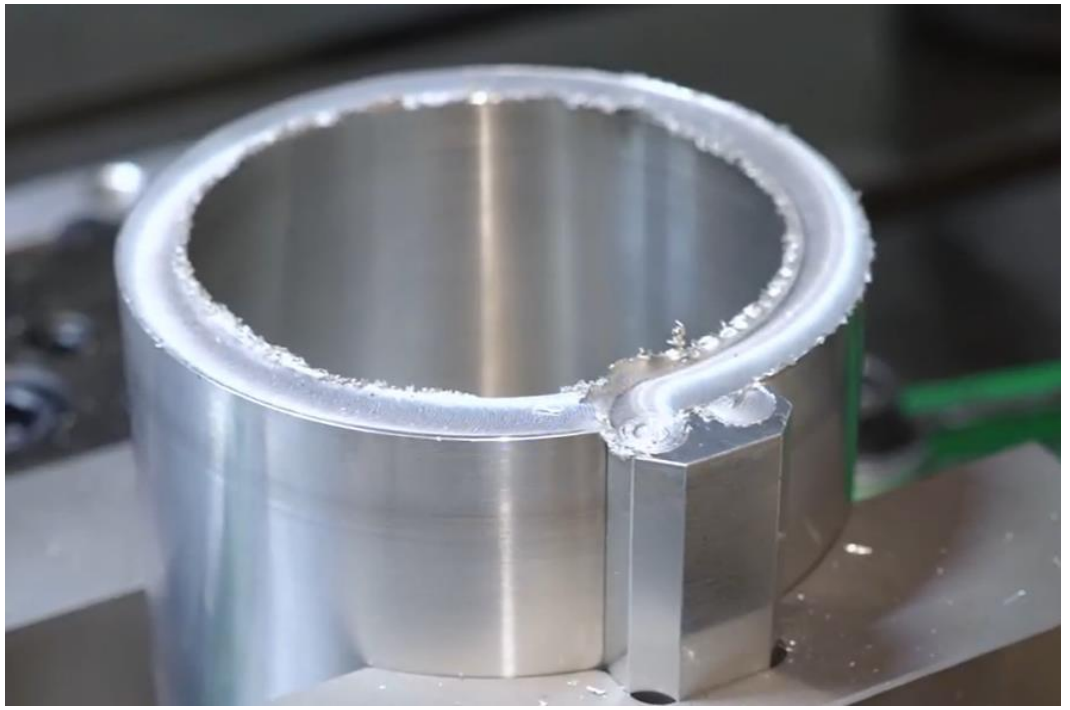

Benefits

- **Join materials** that are **difficult to fusion weld** (2XXX and 7XXX aluminium alloys).
- Automation.
- **Low distortion** and shrinkage
- Excellent **mechanical properties**
- **No arc or fumes**, no porosity, no spatter, no filler wire required, no gas shielding
- Can operate in **all positions**
- Low cost and **Energy efficient**

Limitations

- **High initial investment**
- Sensitive to **joint tolerances**
- Work piece must be **rigidly clamped**
- **Keyhole** at ends if not used specialized tool
- **No material deposition**
- **Tool material** limitations

Equipment

- Main equipment components:
  - **Machine frame:** provides the rigidity required to withstand axial and transverse forces.
  - **Rotating spindle:** supplies the rotation speed and torque to the welding tool.
  - **Motion system:** controls the tool movement along the joint.
  - **Clamping system:** prevents movement or separation of the workpieces.
  - **Backing plate:** supports the joint and reacts against the axial force.
  - **Control system:** regulates tool position, rotation speed, travel speed and axial force.





Tool Design

The FSW tool consists of two main parts:

- **Shoulder:** generates frictional heat, contains the plasticised material and applies the forging pressure.
- **Pin or probe:** penetrates the joint and promotes material flow and mixing.

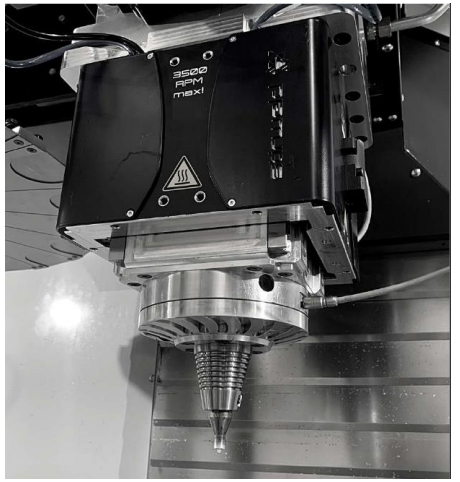

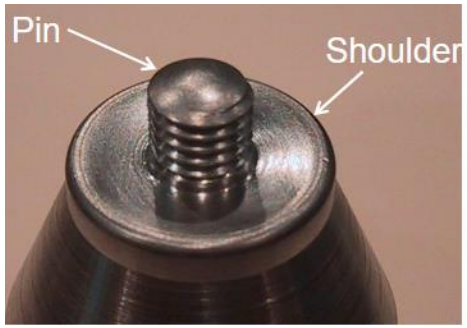

Joint Configurations

FSW equipment can be adapted for:

- Butt joints
- Lap joints
- T-joints
- Corner joints
- Circumferential and three-dimensional welds

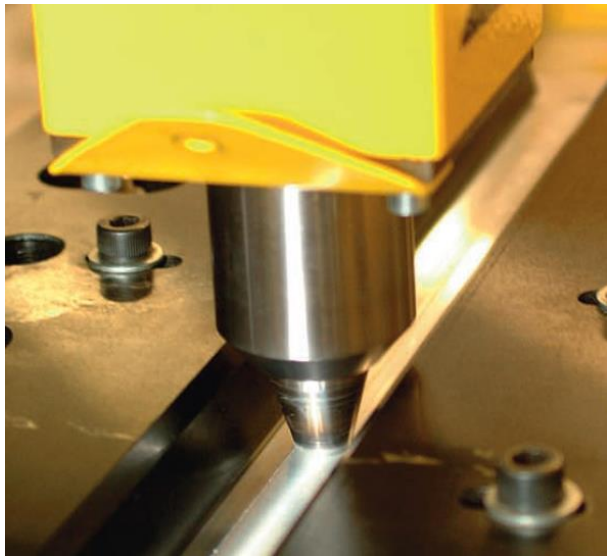

Materials

Material	Sample Thickness						
	Sub 1 mm	1-4 mm	4-8 mm	8-12 mm	Up to 25 mm	Up to 50 mm	Up to 75 mm
Al – Pure		D	D				
Al – 2xxx series		P	P	P	R	R	
Al – 5xxx series	R	P	P	P	P	R	R
Al – 6xxx series	R	P	P	P	P	R	R
Al – 7xxx series		P	P	P	R	R	
Al – Castings		R	R	R	R		
Mg – AM series		R	R	D			
Mg – AZ series		R	R	D			
Cu – Pure	D	D	R	R	D	R	
Cu - Brasses		D	D	D			
Ti – Pure		D	R	D			
Ti - α-β alloys		R	R	D			
Ni - Pure		R	R				
Steels – mild		D	D				
Steels – C-Mn		R	R	R	D		
Steels - Stainless		R	R	R			
Pb - Pure		D	D				
Zn - Pure	D	D					

Area of Current FSW Production Use

Area of Current FSW Research

Area where FSW has been Demonstrated

Aluminium

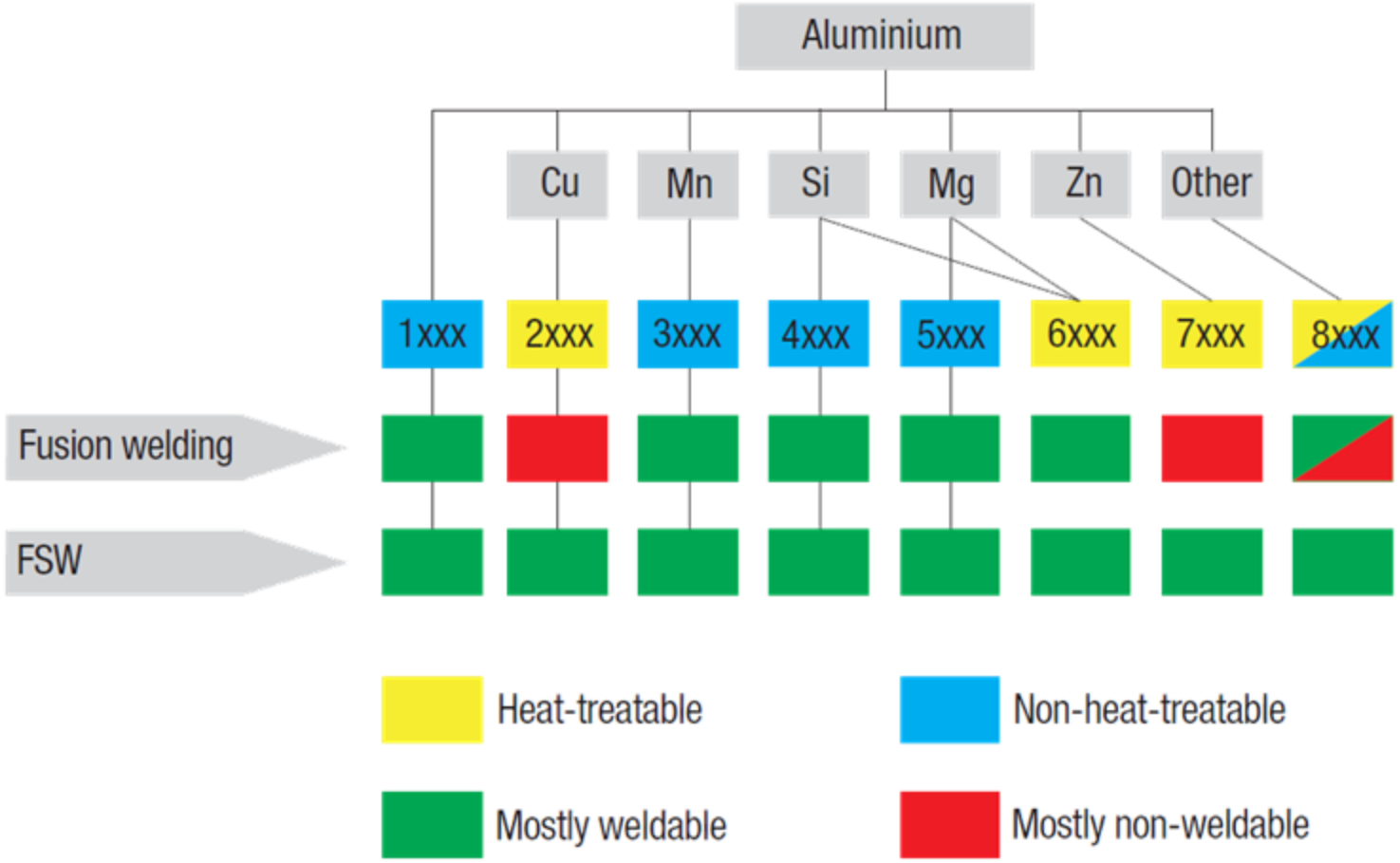
Aluminium
Cu
Mn
Si
Mg
Zn
Other
1xxx
2xxx
3xxx
4xxx
5xxx
6xxx
7xxx
8xxx
Fusion welding
FSW
Heat-treatable
Non-heat-treatable
Mostly weldable
Mostly non-weldable

igarcia@cesol.es



AILEEN